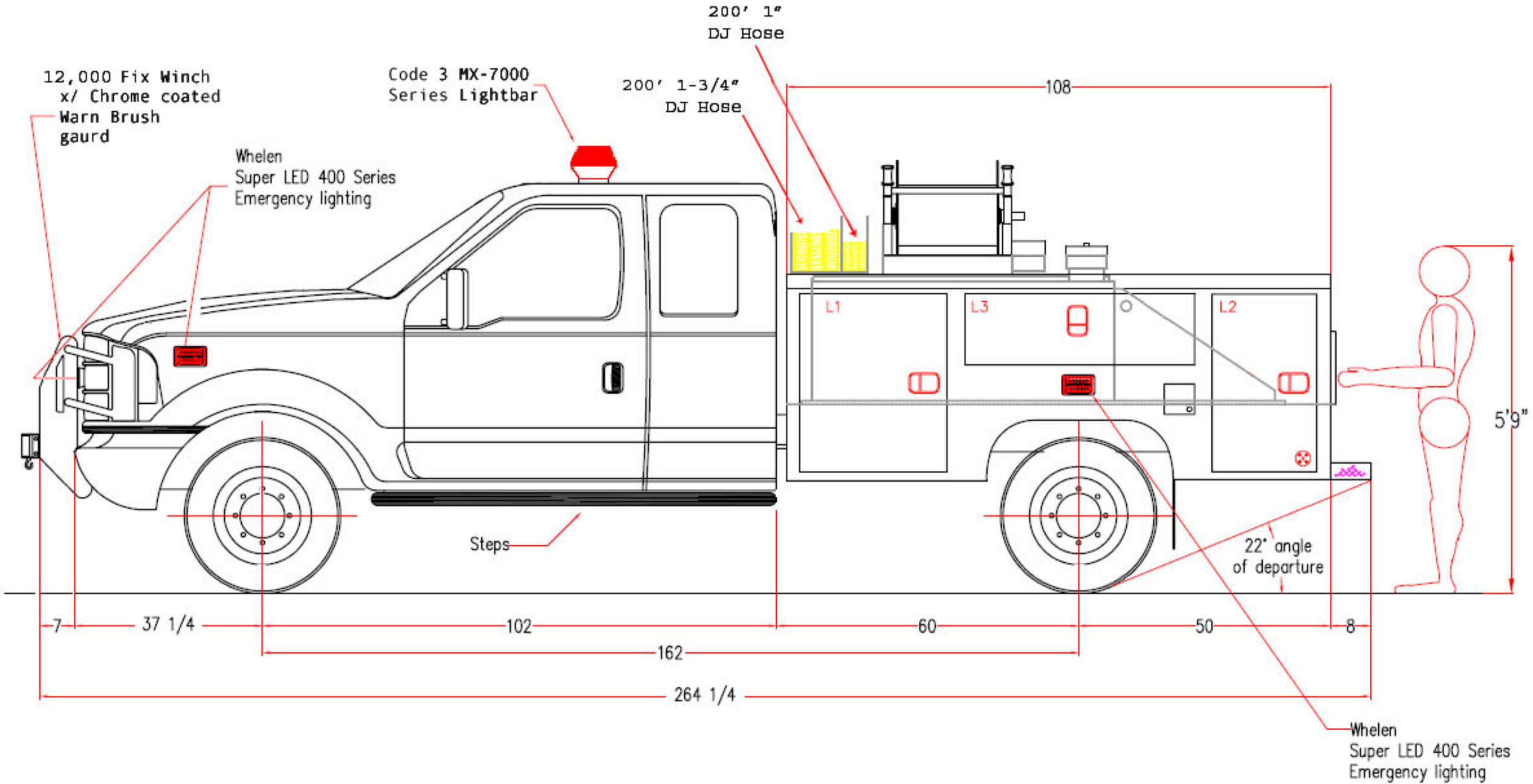
200' 1"
DJ Hose
12,000 Fix Winch
x/ Chrome coated
Warn Brush
gaurd
Code 3 MX-7000
Series Lightbar
200' 1-3/4"
DJ Hose
108
Whelen
Super LED 400 Series
Emergency lighting
L1
L3
L2
5'9"
Steps
22° angle
of departure
7
37 1/4
102
60
50
8
162
264 1/4
Whelen
Super LED 400 Series
Emergency lighting